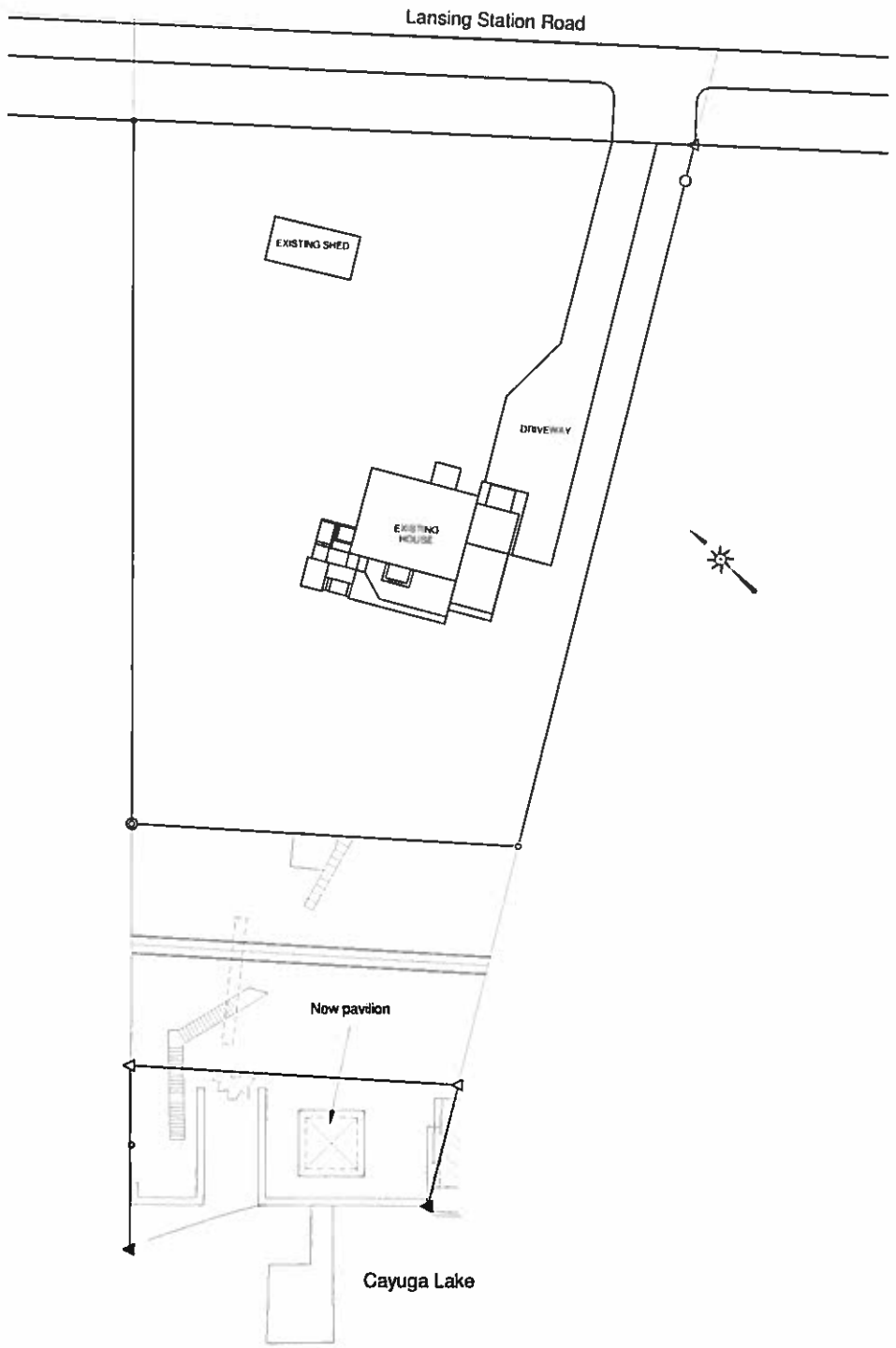

1 Plot Plan
1" = 30'-0"

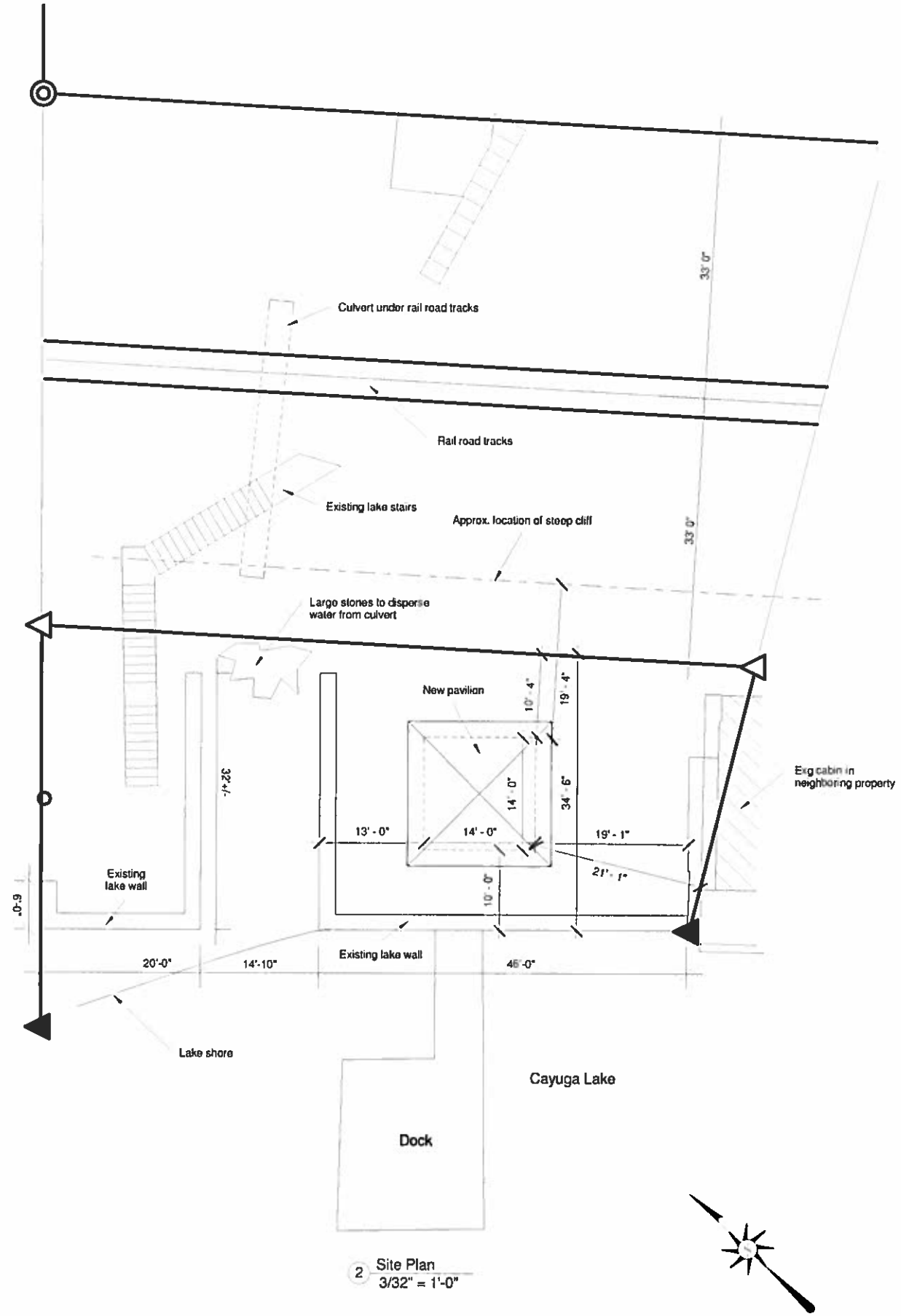

2 Site Plan
3/32" = 1'-0"

Lake Shore Pavilion

CLIENT:
Steve & Liz Davis
727 Lansing Station Rd
Lansing, NY 14882

PROJECT ADDRESS:
727 Lansing Station Rd
Lansing, NY 14882

STATE OF NEW YORK
GARY R. BUSH
086803
LICENSED PROFESSIONAL ENGINEER

Site Plan

132 W. Groton Rd
Groton, NY 13073
607.227.4886
gbush@specconsulting.com

DATE: 10/19/2015
SCALE: AS NOTED
DRAWN BY: RL
JOB:
SHEET:
C1

NOTES
1. Verify all dimensions in field. Notify engineer immediately if any actual dimensions differ from the print dimensions by more than 4"
2. All wood to be in contact with concrete to be Pressure Treated, unless otherwise specified.
3. All connectors and fasteners in contact with PT lumber must be hot dip galvanized or otherwise treated for use with PT lumber
4. All framing lumber to be SYP #2 or better, unless otherwise specified.

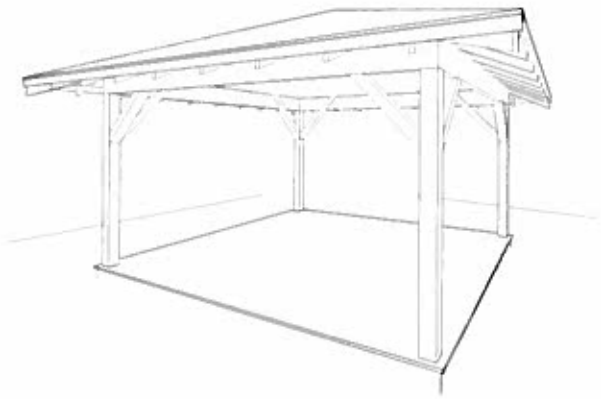

1 3D View 1

2 3D View 2

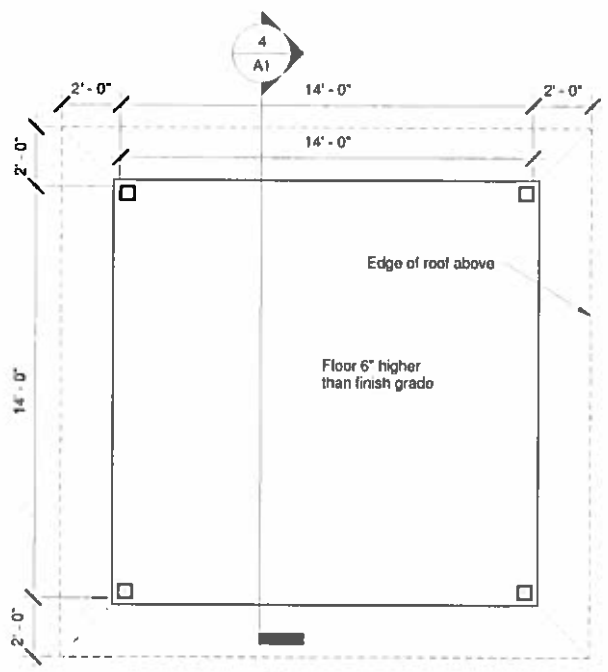

3 Floor Plan
1/4" = 1'-0"

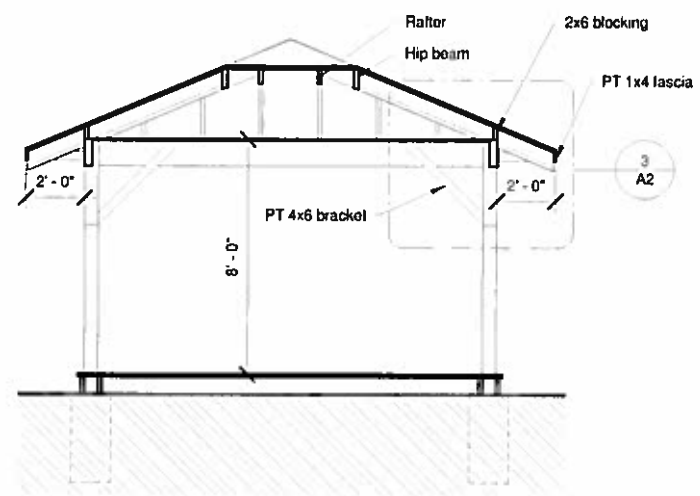

4 Section
1/4" = 1'-0"

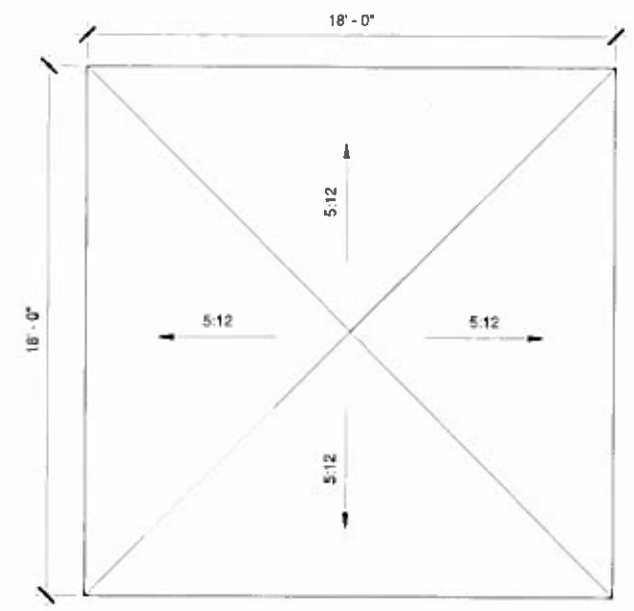

5 Roof Plan
1/4" = 1'-0"

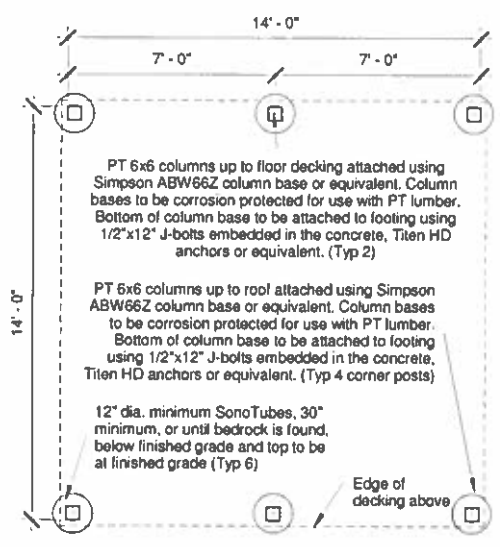

6 Foundation Plan
1/4" = 1'-0"

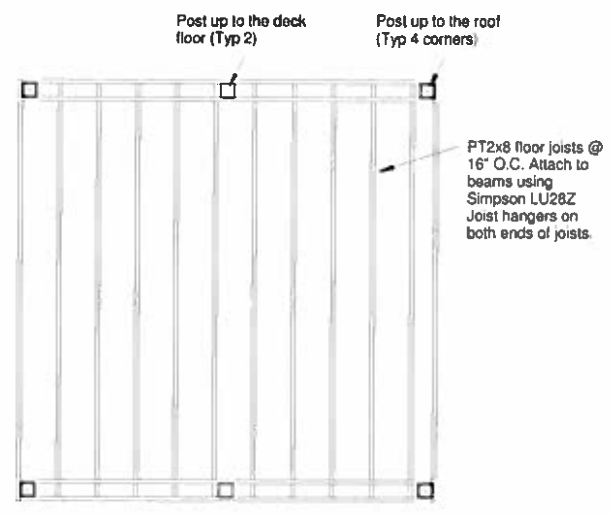

7 Floor Framing Plan
1/4" = 1'-0"

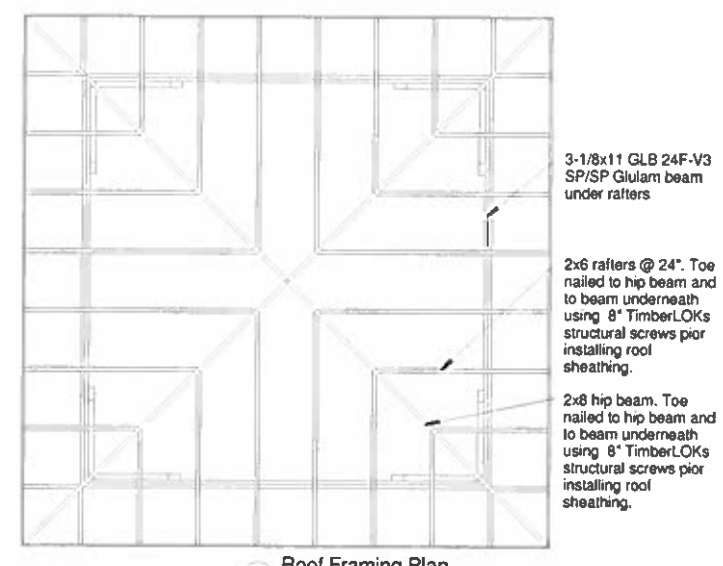

8 Roof Framing Plan
1/4" = 1'-0"

Lake Shore Pavilion

CLIENT:
Steve & Liz Davis
727 Lansing Station Rd
Lansing, NY 14882

PROJECT ADDRESS:
727 Lansing Station Rd
Lansing, NY 14882

STATE OF NEW YORK · GARY R. BUSH · 086003 · LICENSED PROFESSIONAL ENGINEER

Pavilion Drawings

132 W. Groton Rd
Groton, NY 13073
607.227.4886
gbush@specconsulting.com

DATE: 10/19/2015
SCALE: AS NOTED
DRAWN BY: RL
JOB:
SHEET:
A1

NOTES
1. Verify all dimensions in field. Notify engineer immediately if any actual dimensions differ from the print dimensions by more than 4"
2. All wood to be in contact with concrete to be Pressure Treated, unless otherwise specified.
3. All connectors and fasteners in contact with PT lumber must be hot dip galvanized or otherwise treated for use with PT lumber
4. All framing lumber to be SYP #2 or better, unless otherwise specified.

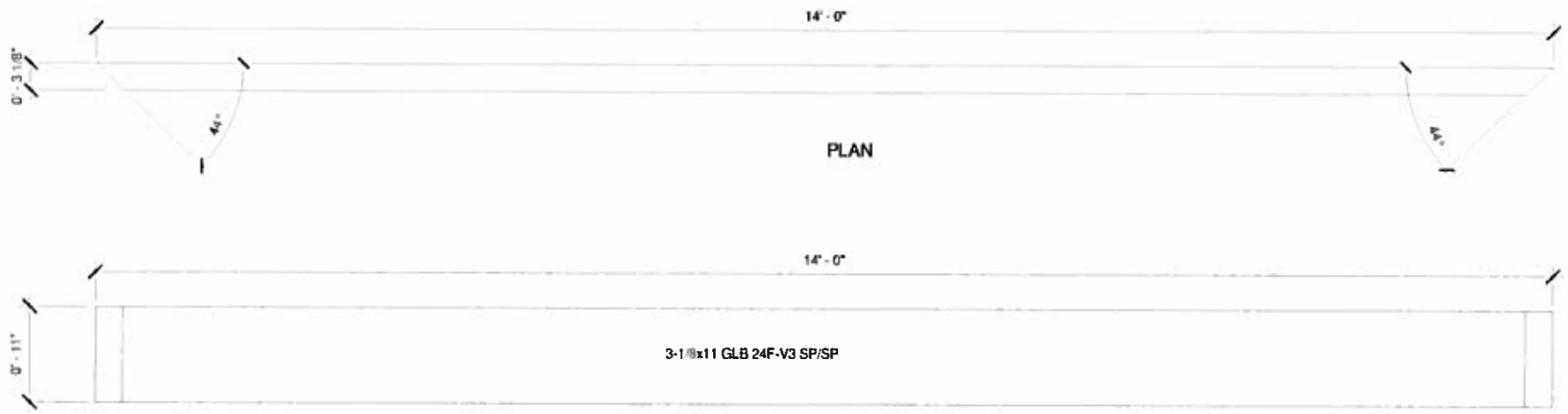

1 Glulam beam profile
1" = 1'-0"

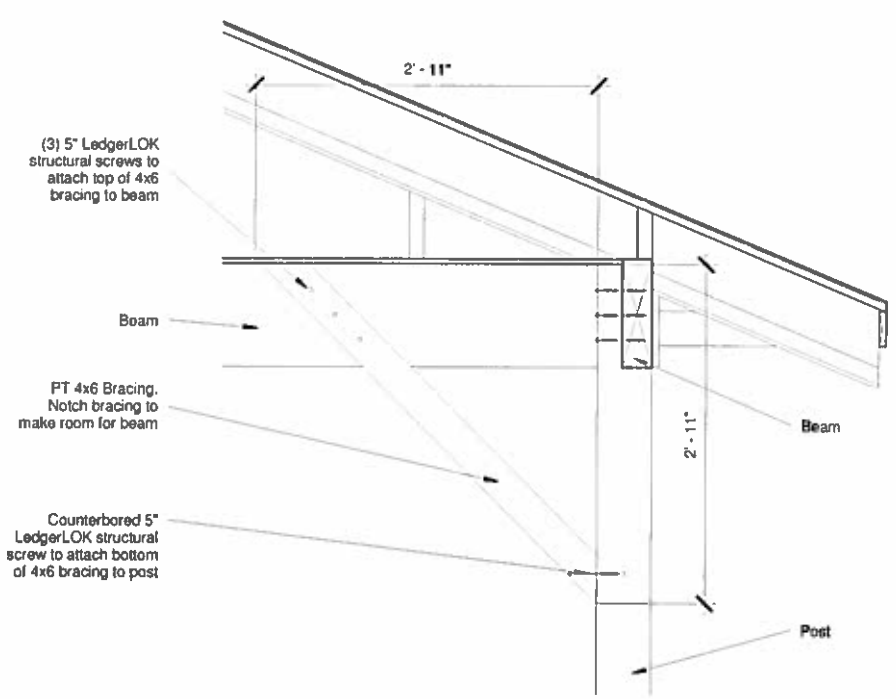

3 Bracing Detail
1" = 1'-0"

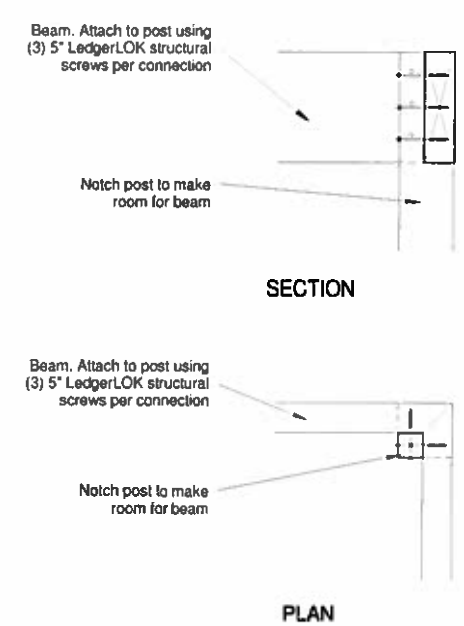

2 Post-Beam Connection Detail
1" = 1'-0"

Lake Shore Pavilion

CLIENT:
Steve & Liz Davis
727 Lansing Station Rd
Lansing, NY 14882

PROJECT ADDRESS:
727 Lansing Station Rd
Lansing, NY 14882

STATE OF NEW YORK
GARY R. BUSH
086003
LICENSED PROFESSIONAL ENGINEER

Pavilion Details

132 W. Groton Rd
Groton, NY 13073
607.227.4886
gbush@specconsulting.com

DATE: 10/19/2015
SCALE: AS NOTED
DRAWN BY: RL
JOB:
SHEET:
A2